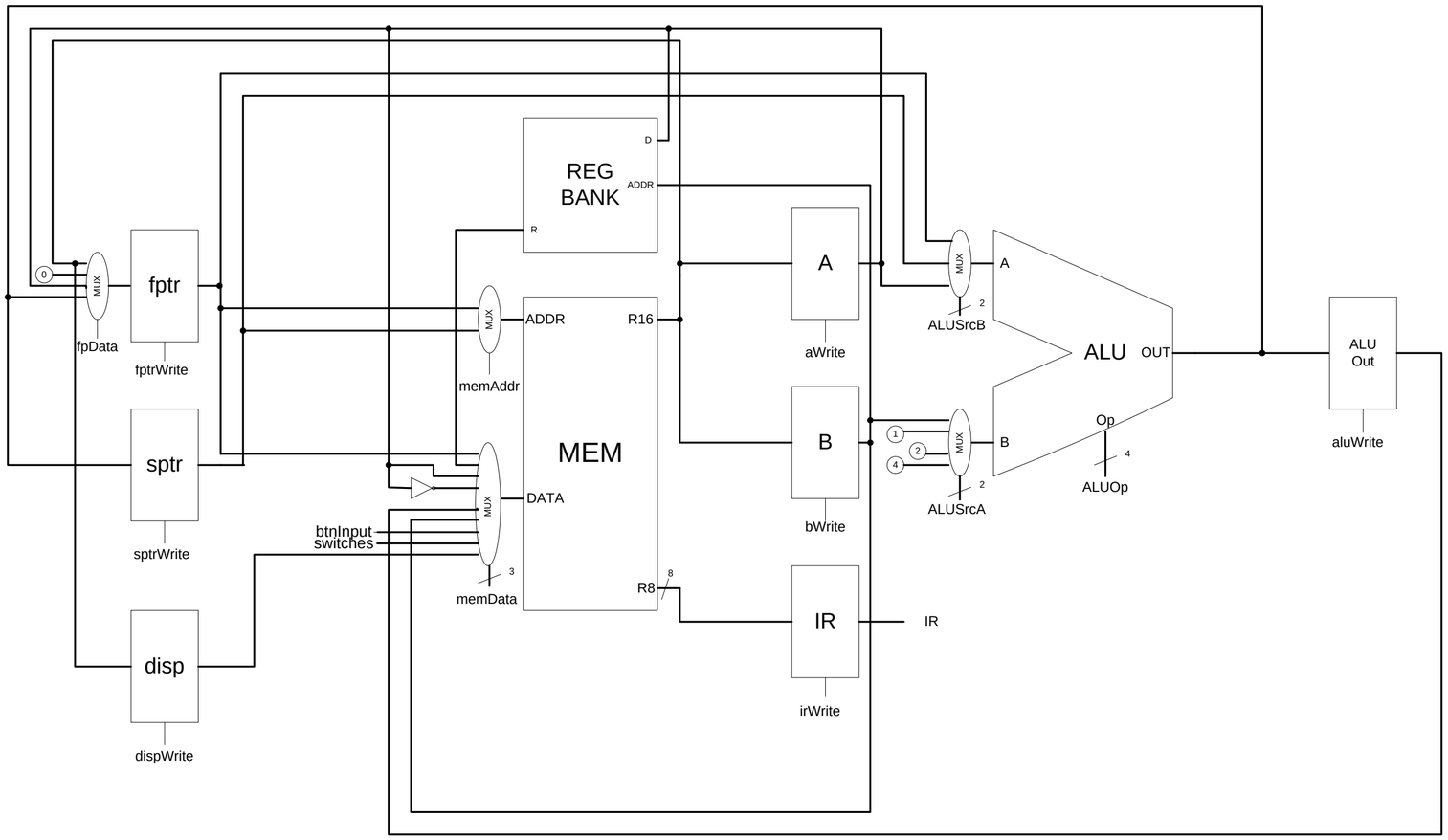
REG
BANK
D
ADDR
R
fptr
fpData
fptrWrite
sptr
sptrWrite
disp
dispWrite
MUX
0
memAddr
ADDR
R16
MEM
DATA
btnInput
switches
memData
3
R8
8
A
aWrite
B
bWrite
IR
irWrite
ALUSrcB
ALUSrcA
2
1
4
ALU
OUT
Op
ALUOp
ALU
Out
aluWrite